prophete
keep moving

6134

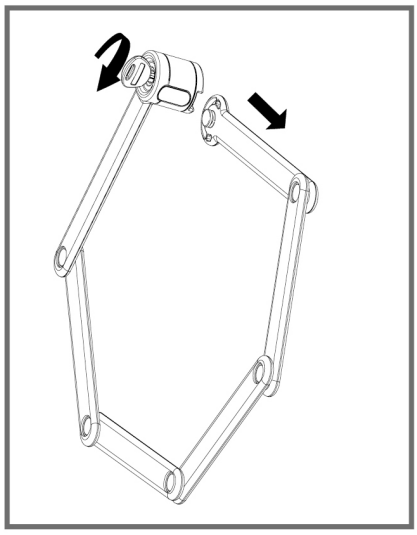

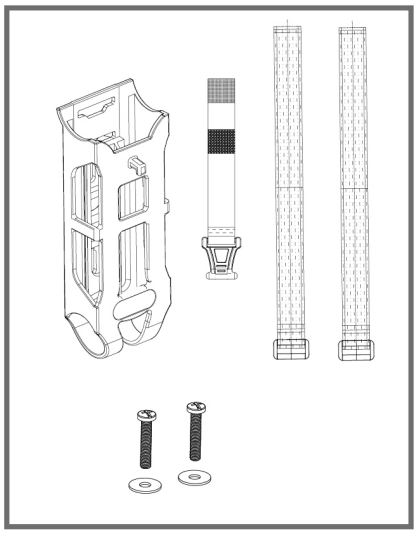

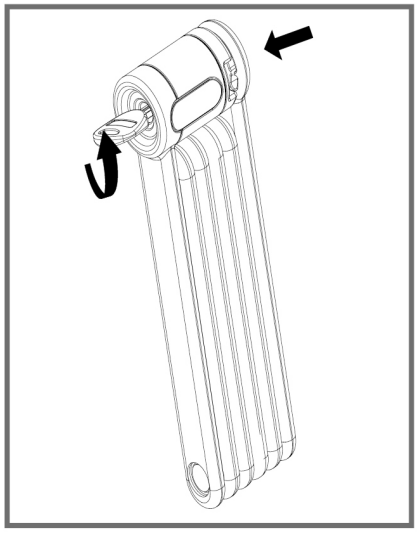

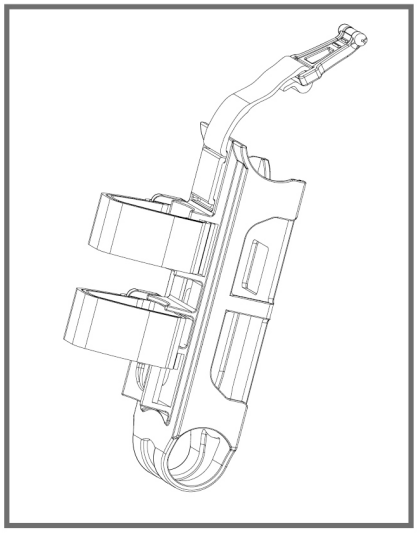

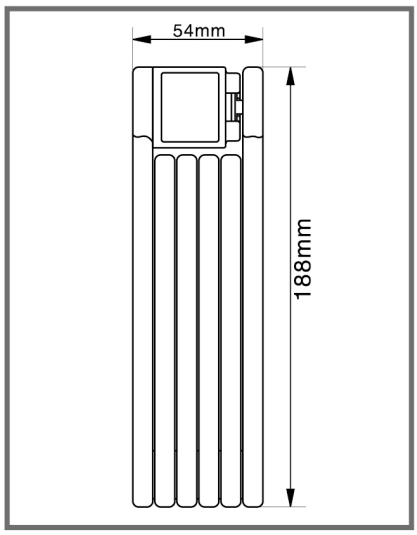

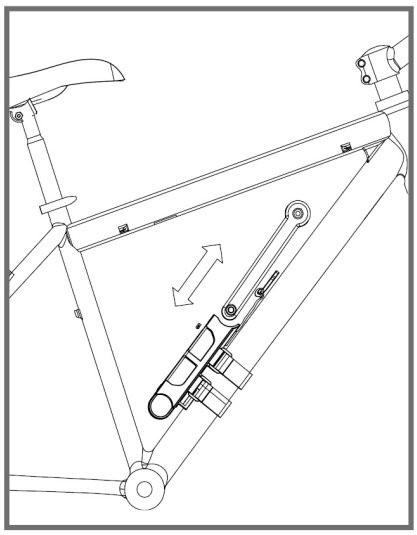

www.prophete.de